SCREW PRESS

DSP – Mechanical Dewatering

Industrial and Municipal Process Equipment Packages

Develop
- process solutions partnerships to find efficiencies on new or existing process.

Design
- machines for solids recovery, liquid clarification, and minimize water consumption.

Deliver
- project specific solutions for better economic, and environmental process performance.

Winery

Dairy

Municipal Wastewater

Doc# SCREW PRESS-1703-R04

DRYCAKE
projects@drycake.com

SCREW PRESS

DSP – Mechanical Dewatering

Drum up to ø47” ø1200mm

MANUFACTURE

DRYCAKE’s technical department is able to develop all the required design activities from feasibility to as-built. Process Validation can be validated using our lab or on-site pilot services.

Our equipment is manufactured in high quality Stainless Steel , and is fully customizable according to project requirements and needs.

The production team is composed by assemblers and certified welders, experts in TIG (Tungsten Inert Gas) welding, a process of arc welding with consumable electrode (Tungsten), under protection of inert gas. After the welding processes, the Stainless Steel is passivated by our operators.

Quality control during the entire design process guarantees the compliance with Customer’s technical requirements, good manufacturing practices and compliance with UL and CSA, ASMI, ANSI Standards and certifications.

All equipment is subject to 3rd party witnessed factory acceptance test prior to shipment.

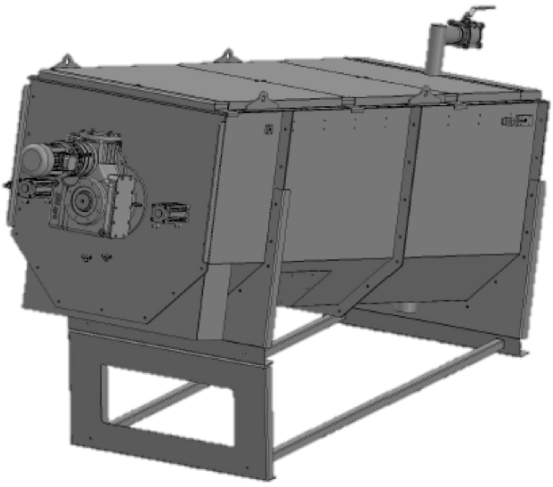

OPERATION

The **DRYCAKE SCREW PRESS (DSP)** provides a unique, cost effective solution for dewatering of municipal and industrial sludge. The equipment is designed to dewater the Primary Sludge and/or Secondary Sludge dewater sludge from a dry content of 0.8-4% to 15-20%.

The sludge is fed to the machine via pump or inlet hopper into a cylindrical 250 microns wedgewire drum. A VFD controlled variable speed shafted auger transports the solids towards the drum discharge. The auger shaft is tapered with a smaller diameter on the inlet side and a larger diameter on the discharge side. Consequently, the space between the shaft and drum reduces as the solids reach the discharge side. The counter-pressure of the cone maximizes the DRYCAKE effect. Typically polymer addition is required for flocculation of the sludge and for best capture rate and DRYCAKE.

The cleaning system of the drum is provided by a motorized water washing system under pressure with brushes installed on the external surface of the screw conveyor. The cleaning system of the drum is provided by brushes installed on the external surface of the screw conveyor and a motorized washing system covering 70% of the drum surface without need for high water consumption.

DRYCAKE
projects@drycake.com

SCREW PRESS

DSP – Mechanical Dewatering

Drum up to ø47” ø1200mm

FEATURES

- ✓ Automatic operation
- ✓ High quality and Reliability
- ✓ Continuous functioning
- ✓ Quick and easy installation
- ✓ Low energy consumption
- ✓ Innovative washing System
- ✓ Dewatering and discharge in one equipment
- ✓ Manufactured in Stainless Steel AISI 304 and 316(L)
- ✓ Welding pickled and passivated
- ✓ Easy removable covers for hygienic inspection
- ✓ Odour and Insects containing covers
- ✓ Low and easy maintenance

With over 100 worldwide references, the **DRYCAKE Screw Press** is a proven solution for your dewatering needs

DRYCAKE
projects@drycake.com